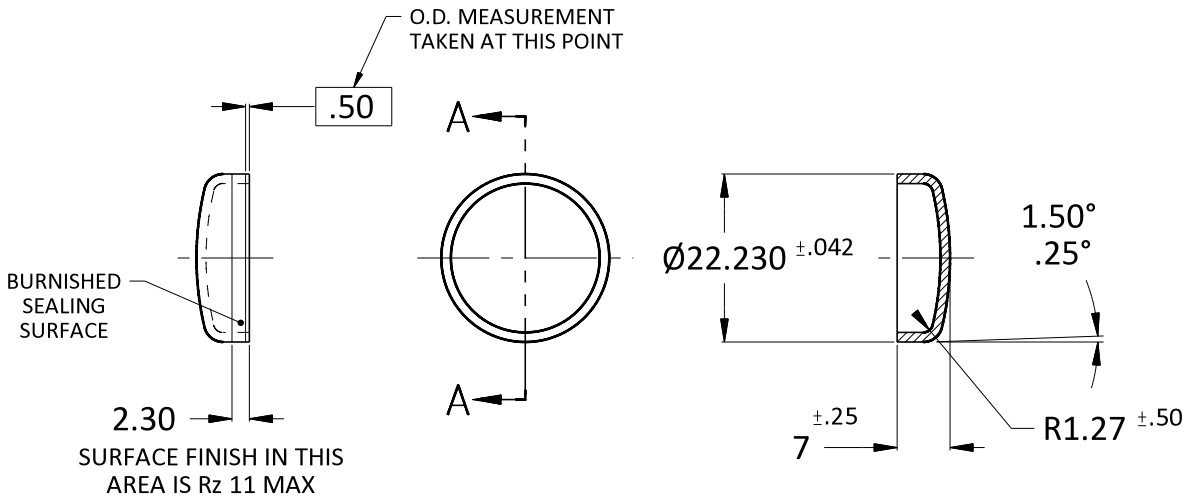

INSTALLATION
RECOMMENDATIONS
NO SCALE

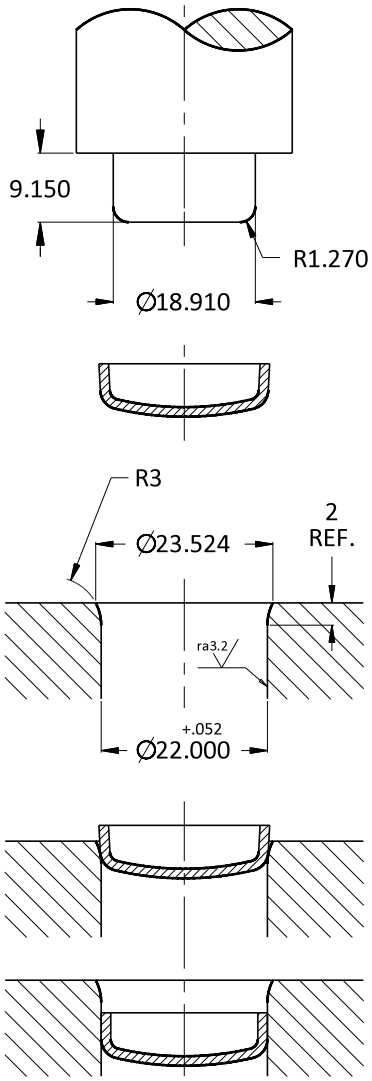

DIAMETER MEASURMENT:
Average of four equally spaced measurements.

ROUNDNESS MEASURMENT:
Max minus min diameter measurement must be less than .080

M·D·Hubbard Spring Company

Engineers and Manufacturers Since 1905

https://www.hubbardspring.com OXFORD, MI - USA

SCALE: 1:1	*PROJECTION:*	*MATERIAL TYPE*		*THICKNESS*	*PLAIN FINISH*	*ELECTRO - PLATED ZINC ASTM B633 SC1 type "V" 0.0002" Min. (72 salt spray hours)*
PRODUCT NAME: CUP PLUG - METRIC DIN 443		*STEEL*	*ASTM A1008/A1008M COLD ROLLED CS TYPE "A" TEMPER*	1.27	CPM-875-S-50	CPM-875-S-50-EZ
PART No.: CPM-875	*DWG DATE:* JAN 1, 2026	*STAINLESS STEEL*	*ASTM A666 - 304 ANNEALED TEMPER*	1.27	CPM-875-KS-50	